FSW-Tech

Friction Stir Welding European Qualifications

CU2 – Joint Preparation and Definition

FSW Operator

Co-funded by the
Erasmus+ Programme
of the European Union

2. Joint Preparation

2.1. Cleaning Methods

2.2. Measuring Processes and Devices

2.3. Positioners

2.4. FSW Programs

2.5. FSW Parameters and Limits

2.6. Welding Procedure Specification (WPS)

2.7. Types of tools

This project has been funded with support from the European Commission. This publication reflects the views only of the author, and the Commission cannot be held responsible for any use which may be made of the information contained therein - ERASMUS + KA2: 2017-1-SK01-KA202-035415

2.1 – Cleaning Methods

<u>Cleaning of joints</u>:

- Necessary step for a successful joint
- Remove dust, grease or moisture
- Negative fallouts of improper surface cleaning:
  - Poor fatigue loading performance
  - Localized low ductility
  - Volumetric defects

<u>Most common</u> cleaning method:

✓ Solvent and wiping it down with a paper towel

Other cleaning methods
(not commonly used):

✓ Grinding

✓ Wire Brushing

✓ Paint Removers

✓ Pickling

This project has been funded with support from the European Commission. This publication reflects the views only of the author, and the Commission cannot be held responsible for any use which may be made of the information contained therein - ERASMUS + KA2: 2017-1-SK01-KA202-035415

2.2 – Measuring Processes and Devices

2.2.1 – Measuring processes

- Thickness of the parts to be welded
- Plate thickness variation
- Geometric flaws may arise from improper thickness measurement and subsequent incorrect parameters to compensate for thickness mismatch
- Most commonly used in a workshop:
  - Mechanical devices: use a more direct approach of comparing the distance between the edges of the part and a ruler

This project has been funded with support from the European Commission. This publication reflects the views only of the author, and the Commission cannot be held responsible for any use which may be made of the information contained therein - ERASMUS + KA2: 2017-1-SK01-KA202-035415

2.2 – Measuring Processes and Devices

2.2.2 – Measuring devices

Thickness gauges

Vernier calliper

This project has been funded with support from the European Commission. This publication reflects the views only of the author, and the Commission cannot be held responsible for any use which may be made of the information contained therein - ERASMUS + KA2: 2017-1-SK01-KA202-035415

2.2 – Measuring Processes and Devices

2.2.2 – Measuring devices

How to use a calliper?

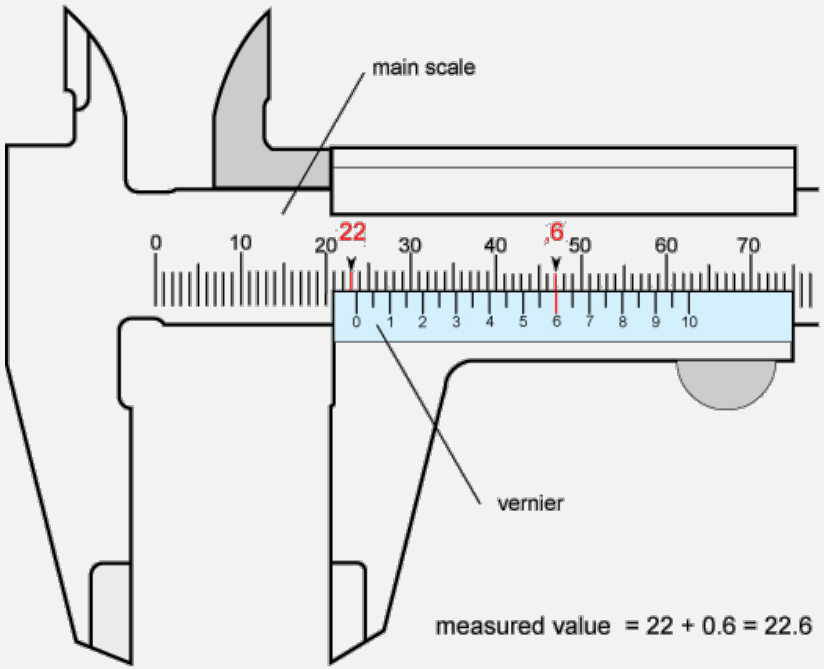

This project has been funded with support from the European Commission. This publication reflects the views only of the author, and the Commission cannot be held responsible for any use which may be made of the information contained therein - ERASMUS + KA2: 2017-1-SK01-KA202-035415

2.3 – Positioners

2.3.1 – Types of Jigs

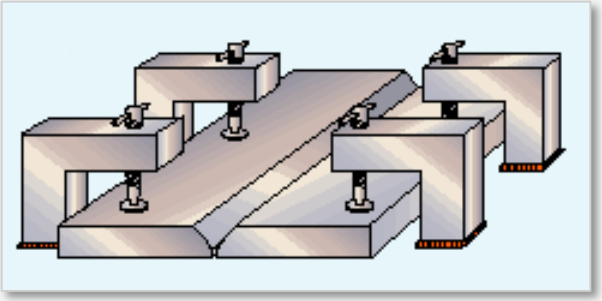

Welding jig *(Courtesy of TWI)*

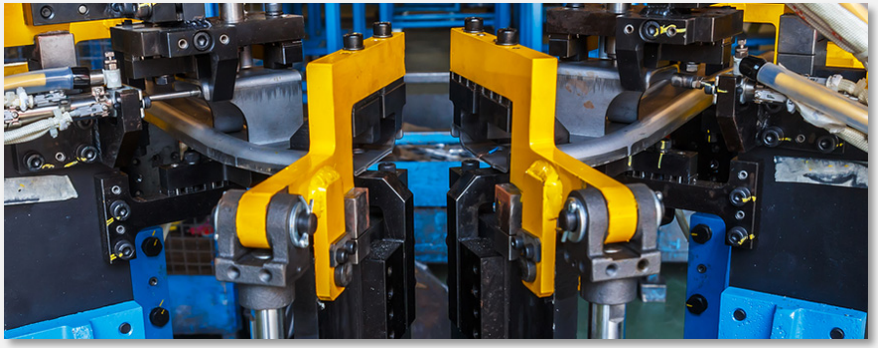

Welding jig *(Courtesy of Tulsa Welding School)*

Drill jig *(Courtesy of Kreg Jig)*

This project has been funded with support from the European Commission. This publication reflects the views only of the author, and the Commission cannot be held responsible for any use which may be made of the information contained therein - ERASMUS + KA2: 2017-1-SK01-KA202-035415

2.3 – Positioners

2.3.2 – Types of Fixtures

Frame Railing

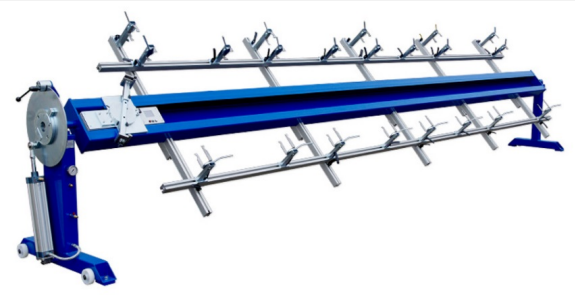

Railing Welding

Vacuum clamping

This project has been funded with support from the European Commission. This publication reflects the views only of the author, and the Commission cannot be held responsible for any use which may be made of the information contained therein - ERASMUS + KA2: 2017-1-SK01-KA202-035415

2.3 – Positioners

2.3.3 – Clamping Systems

Types of clamping:

- ✓ Mechanical actuation clamps
- ✓ Pneumatic and Hydraulic clamps
- ✓ Vacuum clamping
- ✓ Magnetic clamping
- ✓ Electrostatic clamping

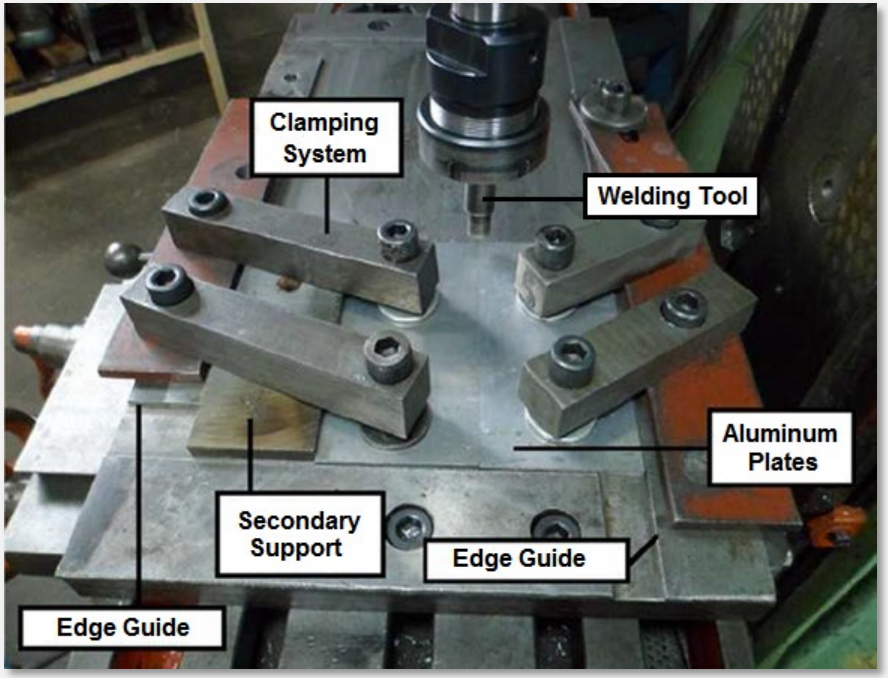

This project has been funded with support from the European Commission. This publication reflects the views only of the author, and the Commission cannot be held responsible for any use which may be made of the information contained therein - ERASMUS + KA2: 2017-1-SK01-KA202-035415

2.3 – Positioners

2.3.4 – Clamping Principles

- ✓ **Position** – direct the clamping force on a robust and supported part of the workpiece
- ✓ **Strength** – enough to ensure a secure hold without damaging the workpiece
- ✓ **Productivity** – clamping time should be reduced with the aid of knobs and handles to achieve a higher productivity
- ✓ **Ergonomics** – the whole process of clamping should be operator friendly, reducing fatigue
- ✓ Clamps may be equipped with **fibre pads** to avoid damaging fragile workpieces

This project has been funded with support from the European Commission. This publication reflects the views only of the author, and the Commission cannot be held responsible for any use which may be made of the information contained therein - ERASMUS + KA2: 2017-1-SK01-KA202-035415

2.3 – Positioners

2.3.5 – Influences of the clamping system on the weld

Influencing factors on distortion:

- ✓ Clamp location
- ✓ Clamping time
- ✓ Clamping release time
- ✓ Pre-heating of the clamps.

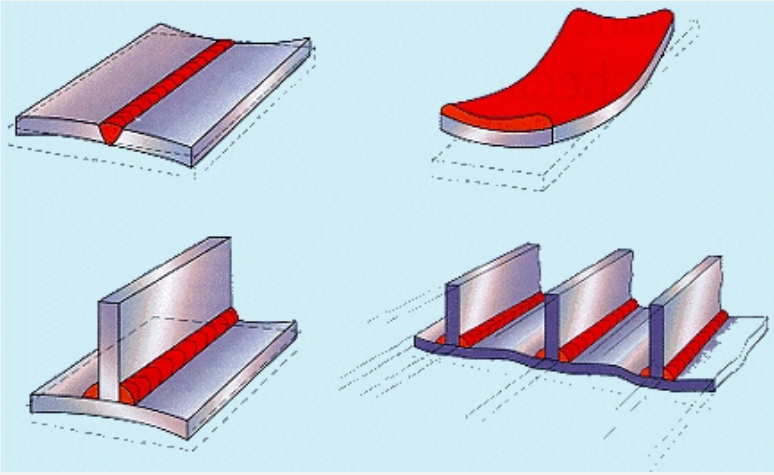

Common forms of distortion in welds
(courtesy of TWI)

This project has been funded with support from the European Commission. This publication reflects the views only of the author, and the Commission cannot be held responsible for any use which may be made of the information contained therein - ERASMUS + KA2: 2017-1-SK01-KA202-035415

2.4 – FSW Programs

2.4.1 – Types of FSW programs

Example of machine and control panel
(Courtesy of Grenzebach)

Control system developed for FSW
(Courtesy of ESAB)

This project has been funded with support from the European Commission. This publication reflects the views only of the author, and the Commission cannot be held responsible for any use which may be made of the information contained therein - ERASMUS + KA2: 2017-1-SK01-KA202-035415

2.4 – FSW Programs

2.4.2 – Basics on FSW programs

What is include in a FSW program?

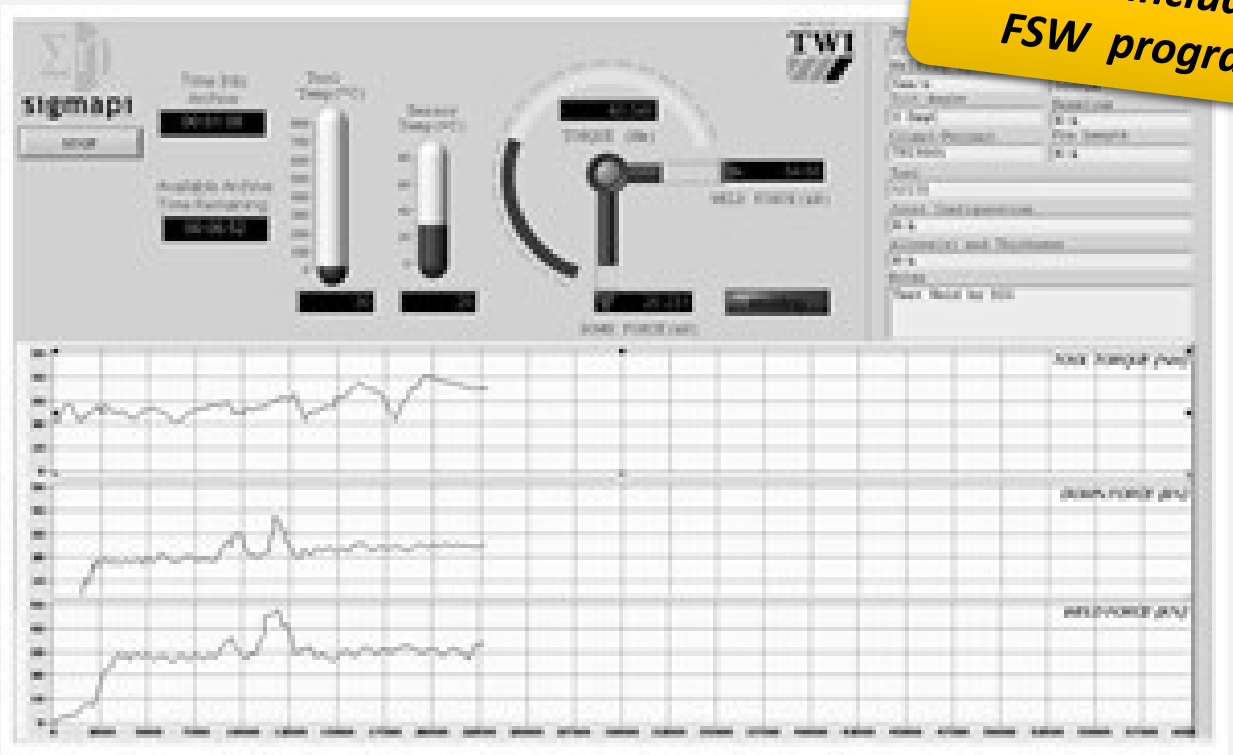

This project has been funded with support from the European Commission. This publication reflects the views only of the author, and the Commission cannot be held responsible for any use which may be made of the information contained therein - ERASMUS + KA2: 2017-1-SK01-KA202-035415

2.5 – Parameters and Limits

2.5.1 – Control System

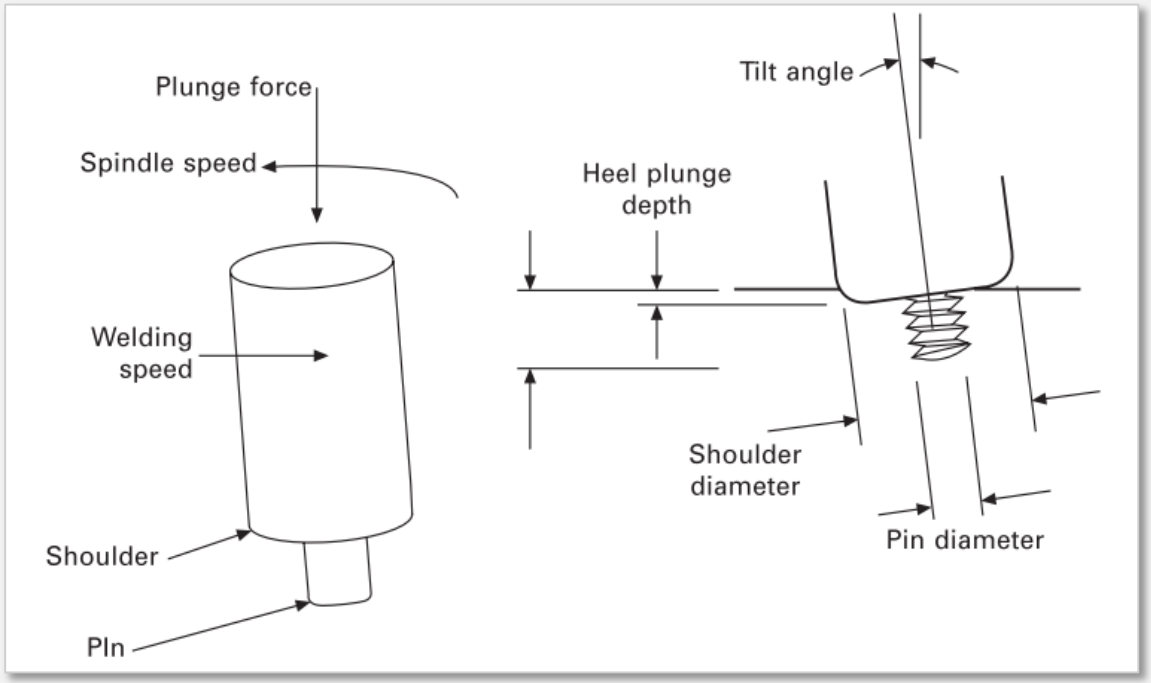

- ✓ Welding speed or Traverse speed
- ✓ Tool rotational speed
- ✓ Plunge depth
- ✓ Axial force or Tool's plunge force
- ✓ Tool tilt angle

This project has been funded with support from the European Commission. This publication reflects the views only of the author, and the Commission cannot be held responsible for any use which may be made of the information contained therein - ERASMUS + KA2: 2017-1-SK01-KA202-035415

2.6 – Welding Procedure Specification (WPS)

Preliminary welding procedure specification

Manufacturer's pWPS No.: _____
Manufacturer's WPQR No.: _____
Friction stir welding operator's name: _____
Parent material type, temper, and reference standard(s): _____
Parent material thickness (mm): _____
Outside diameter of tube (mm): _____
Equipment identification (model, serial number, and manufacturer): _____
Tool identification (sketch)[1]:
Clamping arrangement (sketch)[1]:
Tack welding: _____
Joint preparation and cleaning methods: _____

Joint design

Joint design and joint configuration	Welding sequences
(Sketch)[1]	

Welding details

Run	Tool motion, rotation speed r/min	Heel plunge depth mm or axial force kN	Tilt angle °	Side tilt angle °	Dwell time s	Welding speed mm/min others

Welding position: _____
Pre-weld heat treatment: _____
Preheating temperature (°C): _____ Preheat maintenance temperature (°C): _____
Interpass temperature (°C): _____
Shielding gas: _____ Designation: _____ Gas flow rate (l/min): _____
Postweld processing: _____
Postweld heat treatment: _____
Time, temperature, method: _____
Heating and cooling rates: _____
Other information[1] _____

.....

Manufacturer
Name, date and signature

_____

1) If required.

This project has been funded with support from the European Commission. This publication reflects the views only of the author, and the Commission cannot be held responsible for any use which may be made of the information contained therein - ERASMUS + KA2: 2017-1-SK01-KA202-035415

2.6 – WPS

2.6.1 – Joint Design

Joint Design	Before Welding	After Welding
Butt joint	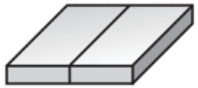	
Butt joint	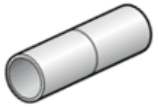	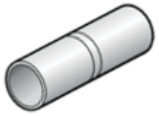
Lap joint		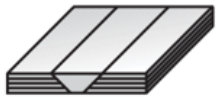
Lap + Butt joint	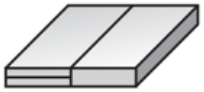	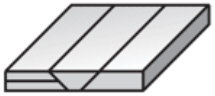

Joint Design	Before Welding	After Welding
Lap + Butt joint	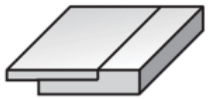	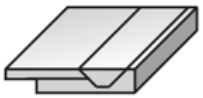
Corner joint	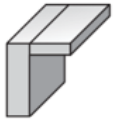	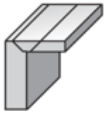
Corner joint	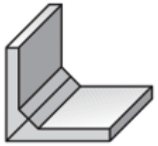	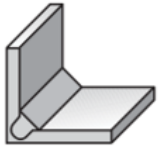
T-joint	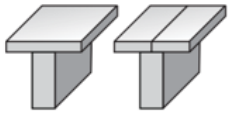	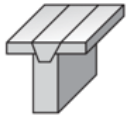

This project has been funded with support from the European Commission. This publication reflects the views only of the author, and the Commission cannot be held responsible for any use which may be made of the information contained therein - ERASMUS + KA2: 2017-1-SK01-KA202-035415

2.7 – Types of FSW Tools

FSW Tool

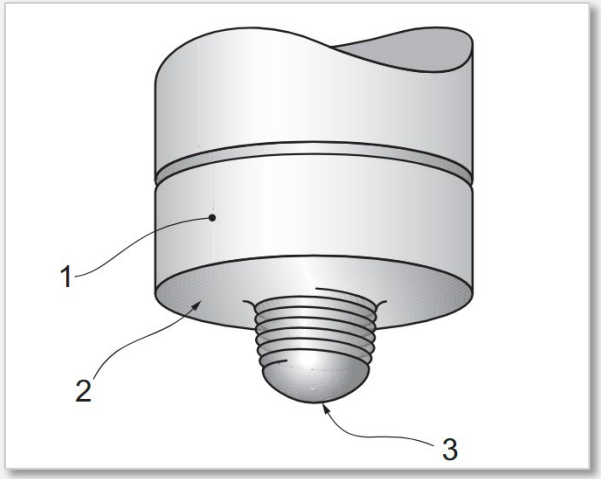

1 – Workpiece
2 – Shoulder
3 – Probe

Tool shapes for FSW

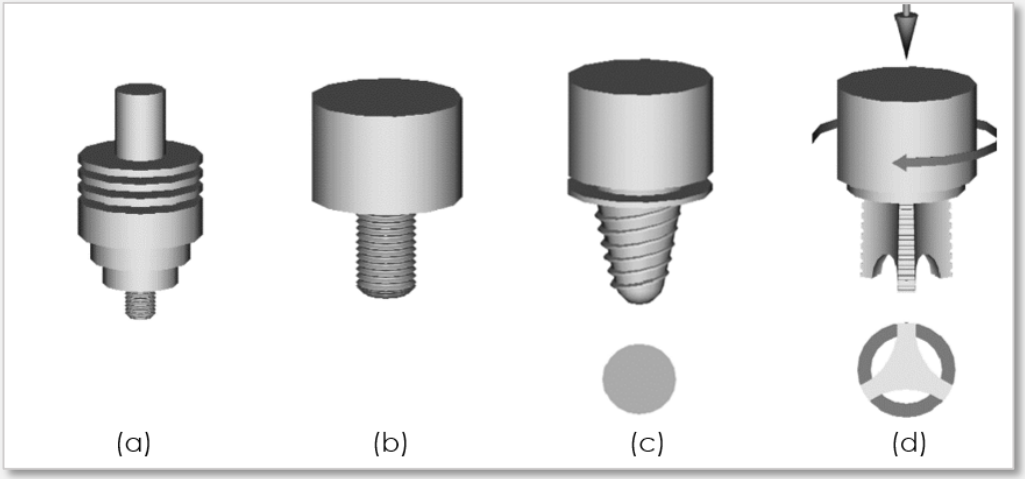

(a) Stepped shoulder with cylindrical threaded pin
(b) Flat shoulder with cylindrical threaded pin
(c) Flat shoulder with tapered pin
(d) Flared-triflute pin

This project has been funded with support from the European Commission. This publication reflects the views only of the author, and the Commission cannot be held responsible for any use which may be made of the information contained therein - ERASMUS + KA2: 2017-1-SK01-KA202-035415

2.7 – Types of FSW Tools

2.7.1 – Offset position

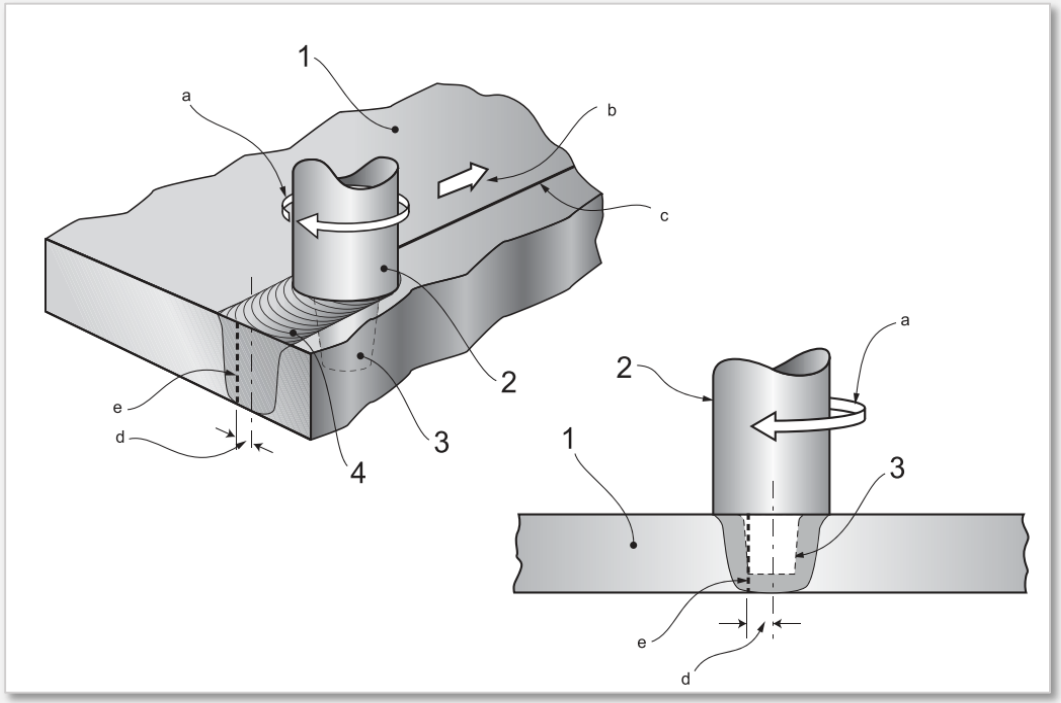

1. Workpiece
2. Tool
3. Probe
4. Weld face

a. Direction of tool surface
b. Direction of source
c. Joint (faying surfaces)
d. Lateral offset
e. Location of joint before welding

This project has been funded with support from the European Commission. This publication reflects the views only of the author, and the Commission cannot be held responsible for any use which may be made of the information contained therein - ERASMUS + KA2: 2017-1-SK01-KA202-035415

2.7 – Types of FSW Tools

2.7.2 – Z position

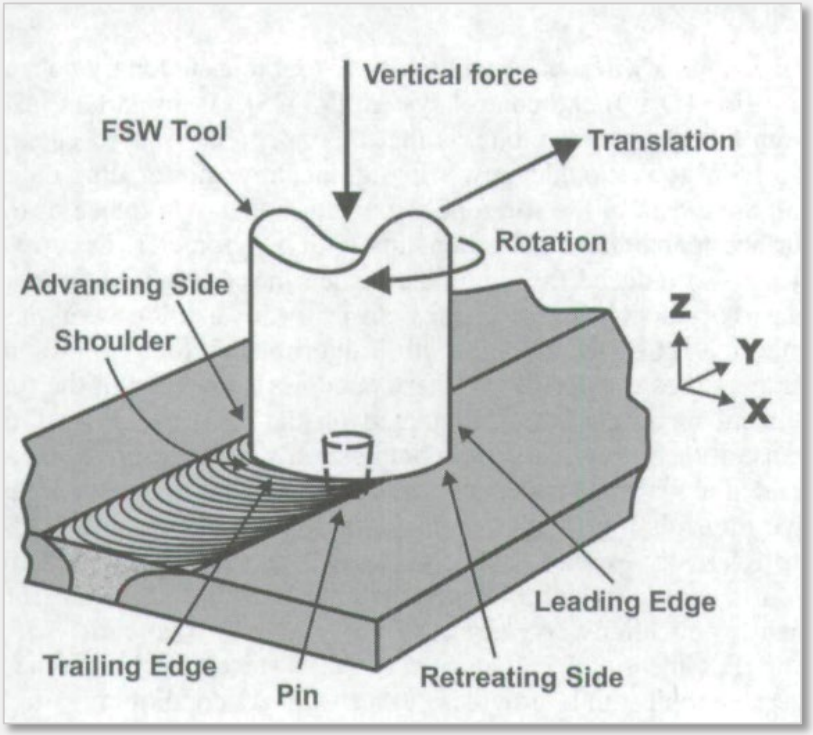

<u>z position</u> – spatial location on the process which is usually zero at the top surface of the workpiece

The force applied along the z position is called <u>axial force</u>

This project has been funded with support from the European Commission. This publication reflects the views only of the author, and the Commission cannot be held responsible for any use which may be made of the information contained therein - ERASMUS + KA2: 2017-1-SK01-KA202-035415

2.7 – Types pin/probes/tools

2.7.3 – Plunge depth

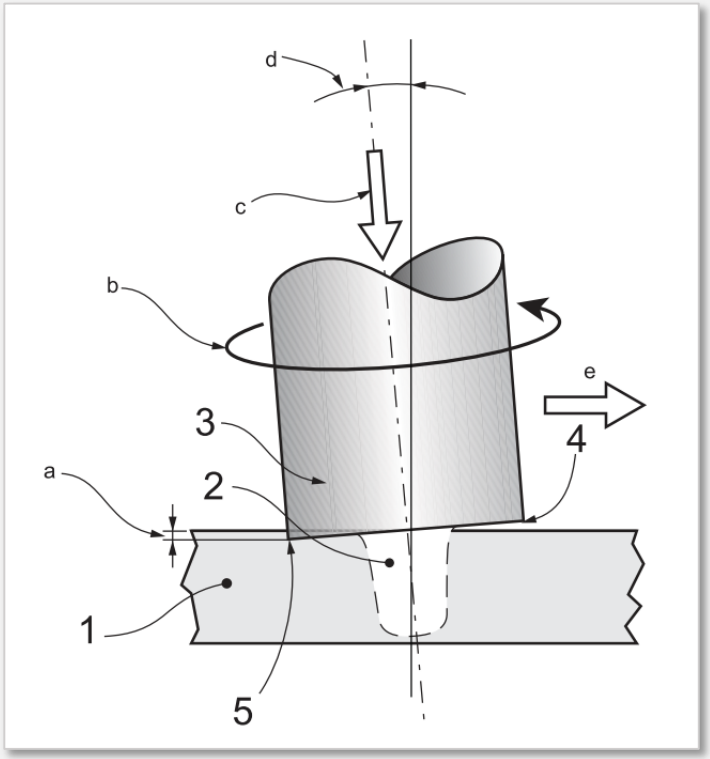

Distance the heel extends into the weld metal

1. Workpiece
2. Probe
3. Tool
4. Shoulder (leading edge)
5. Heel (shoulder trailing edge)

a. Heel plunge depth
b. Direction of tool rotation
c. Axial force
d. Tilt angle
e. Direction of welding

This project has been funded with support from the European Commission. This publication reflects the views only of the author, and the Commission cannot be held responsible for any use which may be made of the information contained therein - ERASMUS + KA2: 2017-1-SK01-KA202-035415

2.8 – References

[2-1] Future Weld, *Mechanized Welding - Mechanized, Orbital and Robot Welding*. 2014.

[2-2]D. Lohwasser and Z. Chen, *Friction Stir Welding: From Basics to Applications*. 2010.

[2-3] R. S. Mishra and M. W. Mahoney, "Friction Stir Welding and Processing," *ASM Int.*, p. 368, 2007.

[2-4] I. O. for S. (ISO), *Final Draft ISO/FDIS 25239-5*, 1st ed. ISO, 2011.

[2-5] ESAB, "Handbook - Joint Design & Prep." [Online]. Available: https://www.esabna.com/euweb/sa_handbook/585sa2_26.htm. [Accessed: 18-Jul-2018].

[2-6] J. N. Pires, A. Loureiro, and G. Bölmsjo, *Welding robots: Technology, system issues and applications*, no. August 2015. 2006.

[2-7] "What Is a Welding Jig? - Tulsa Welding School." [Online]. Available: https://www.weldingschool.com/blog/welding/what-is-a-welding-jig/. [Accessed: 19-Jul-2018].

[2-8]"UNIT 4 JIGS AND FIXTURES Structure 4.1 Introduction."

[2-9] "Welding Fixtures and How They Work | Forster America." [Online]. Available: https://www.forsteramerica.com/welding-fixtures-and-how-they-work/. [Accessed: 19-Jul-2018].

[2-10] T. Jagadeesha, "CLAMPING DEVICES." National Institute of Technology Calicut, p. 20.

[2-11] T. Schenk, I. M. Richardson, M. Kraska, and S. Ohnimus, "A study on the influence of clamping on welding distortion," *Comput. Mater. Sci.*, vol. 45, no. 4, pp. 999–1005, 2009.

[2-12] D. Lohwasser and Z. Chen, *Friction stir welding Related titles :* 2010.

[2-13] I. O. for S. (ISO), *Final Draft ISO/FDIS 25239-1*, 1st ed. ISO, 2011.

This project has been funded with support from the European Commission. This publication reflects the views only of the author, and the Commission cannot be held responsible for any use which may be made of the information contained therein - ERASMUS + KA2: 2017-1-SK01-KA202-035415

2.8 – References

[2-14] P. S. D. N. K. Mishra, S. R., Friction stir welding and processing. 2014.

[2-15] I. O. for S. (ISO), “ISO 15607,” 2003.

[2-16] I. O. for S. (ISO), “Final Draft ISO/FDIS 25239-4,” no. 4, 2011.

[2-17] R. R. Of et al., “Draft International Standard Iso / Fdis,” vol. 2006, 2006.

[2-18] V. K. M, M. Arivarsu, M. Manikandan, and N. Arivazhagan, “Review on friction stir welding of steels,” Mater. Today Proc., vol. 5, no. 5, pp. 13227–13235, 2018.

[2-19] A. Pradeep, “A Review on Friction Stir Welding of Steel,” Int. J. Eng. Res. Dev., vol. 3, no. 11, pp. 2278–67, 2012.

[2-20] R. Miller, “GUIDELINES FOR FRICTION STIR WELDING,” Detroit, 2011.

[2-21] A. Fehrenbacher, N. A. Duffie, N. J. Ferrier, F. E. Pfefferkorn, and M. R. Zinn, “Toward Automation of Friction Stir Welding Through Temperature Measurement and Closed-Loop Control,” J. Manuf. Sci. Eng., vol. 133, no. 5, p. 051008, 2011.

[2-22] HSE Gov.UK, “Welding fume - Reducing the risk.” [Online]. Available: http://www.hse.gov.uk/welding/fume-welding.htm. [Accessed: 07-Aug-2018].

[2-23] ESAB AB Welding Automation and ESAB, “Friction Stir Welding - Technical Handbook.” [Online]. Available: https://www.esabna.com/euweb/sa_handbook/585sa2_26.htm. [Accessed: 18-Jul-2018].

[2-24] D. Veljić et al., “Advantages of friction stir welding over arc welding with respect to health and environmental protection and work safety,” Struct. Integr. Life, vol. 15, no. 2, pp. 111–116, 2015.

[2-25] S. B. ; D. R. D.Muruganandam, “HEALTH HAZARDS DUE TO VARIOUS WELDING TECHNIQUES AND ITS REMEDY BY FRICTION STIR WELDING (FSW),” Int. J. Res. Aeronaut. Mech. Eng., vol. 2, no. 3, pp. 96–101, 2014

This project has been funded with support from the European Commission. This publication reflects the views only of the author, and the Commission cannot be held responsible for any use which may be made of the information contained therein - ERASMUS + KA2: 2017-1-SK01-KA202-035415

Co-funded by the
Erasmus+ Programme
of the European Union

FSW-Tech

Friction Stir Welding European Qualifications

Thank you

This project has been funded with support from the European Commission. This publication reflects the views only of the author, and the Commission cannot be held responsible for any use which may be made of the information contained therein - ERASMUS + KA2: 2017-1-SK01-KA202-035415